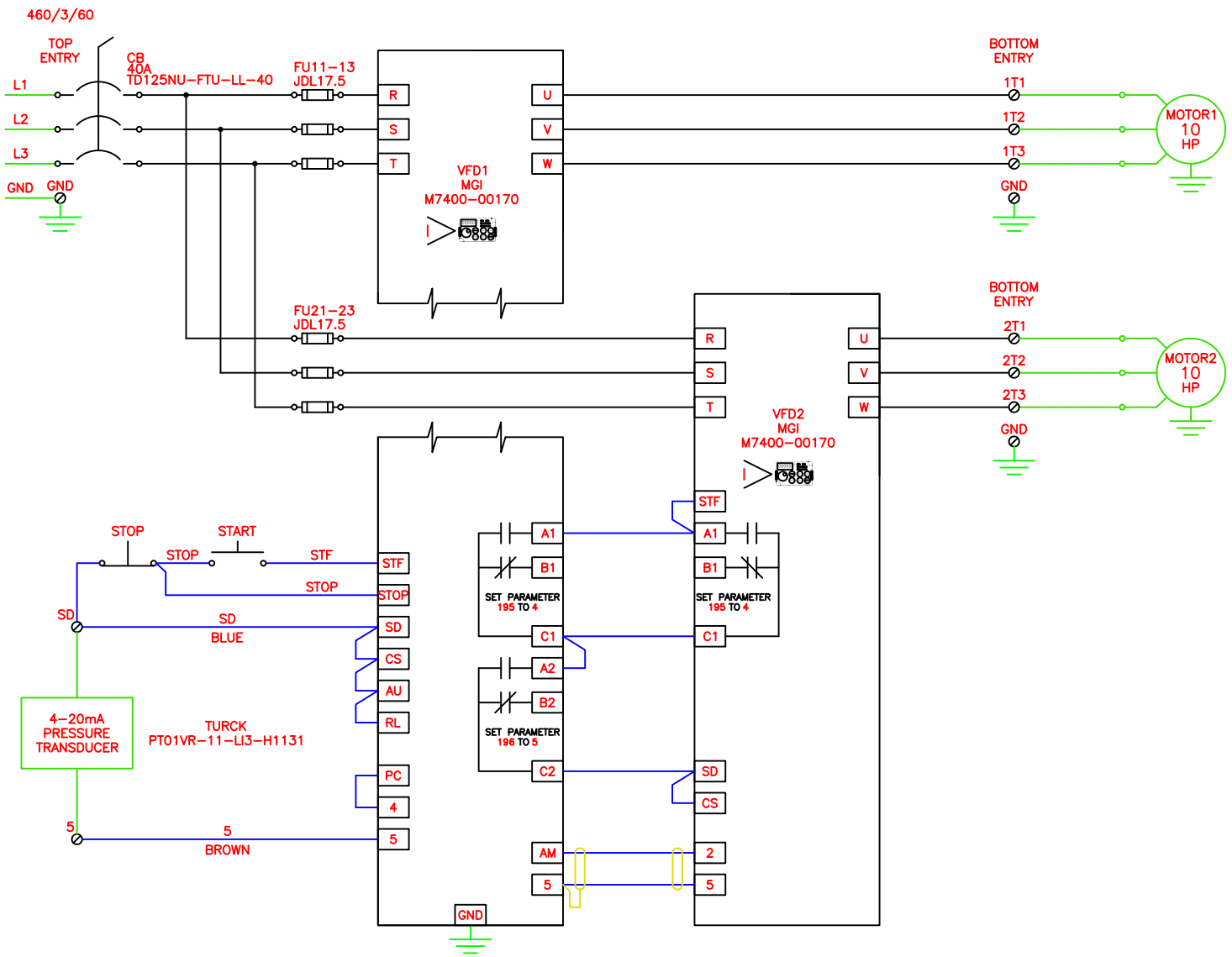

MRS	DRIVE CONNECTION TERMINAL		ARROW SUPPLIED ENCLOSURE WIRING
888	DEVICE CONNECTION TERMINAL		CUSTOMER SUPPLIED ENCLOSURE WIRING
888	TERMINAL NOT FOR CUSTOMER CONNECTION		ARROW SUPPLIED FIELD WIRING
888	TERMINAL FOR CUSTOMER CONNECTION		CUSTOMER SUPPLIED FIELD WIRING
D	LOCATED ON ENCLOSURE DOOR	OUTPUT DESCRIPTION PLC-OUT YAAAA	SUPPLIED PLC OUTPUT
I	LOCATED INSIDE ENCLOSURE	INPUT DESCRIPTION PLC-IN XAAAA	SUPPLIED PLC INPUT
R	LOCATED REMOTE FROM ENCLOSURE	OUTPUT DESCRIPTION PLC-OUT YAAAA	CUSTOMER PLC OUTPUT
C	LOCATED IN RESISTOR CAGE	INPUT DESCRIPTION PLC-IN XAAAA	CUSTOMER PLC INPUT

ENCLOSURE	TYPE	COOLING	BUS BAR RATING	HEIGHT	WIDTH	DEPTH
	NEMA1	VENTED	NONE	36	24	8

PART NUMBER

REV.	DATE	DESCRIPTION
1	13-NOV-09	***** AS BUILT *****
0	02-NOV-09	ORIGINAL DRAWING ISSUE

CUSTOMER NAME

CUSTOMER DRAWING NUMBER

AUTOVAC INDUSTRIAL VACUUM SYSTEMS
TOLL FREE NUMBER - 1-888-628-8682
EMAIL: SALES@AUTOVACINC.COM - WWW.AUTO-VAC.COM

AUTOVAC Industrial Vacuum & Air Systems

PLANT

TITLE 2x10HP 460VAC VFD PACKAGE

SUBTITLE WIRING DIAGRAM

SCALE NONE | DRAWN LHK | DATE 02-NOV-09 | CHECKED

B01129241

1