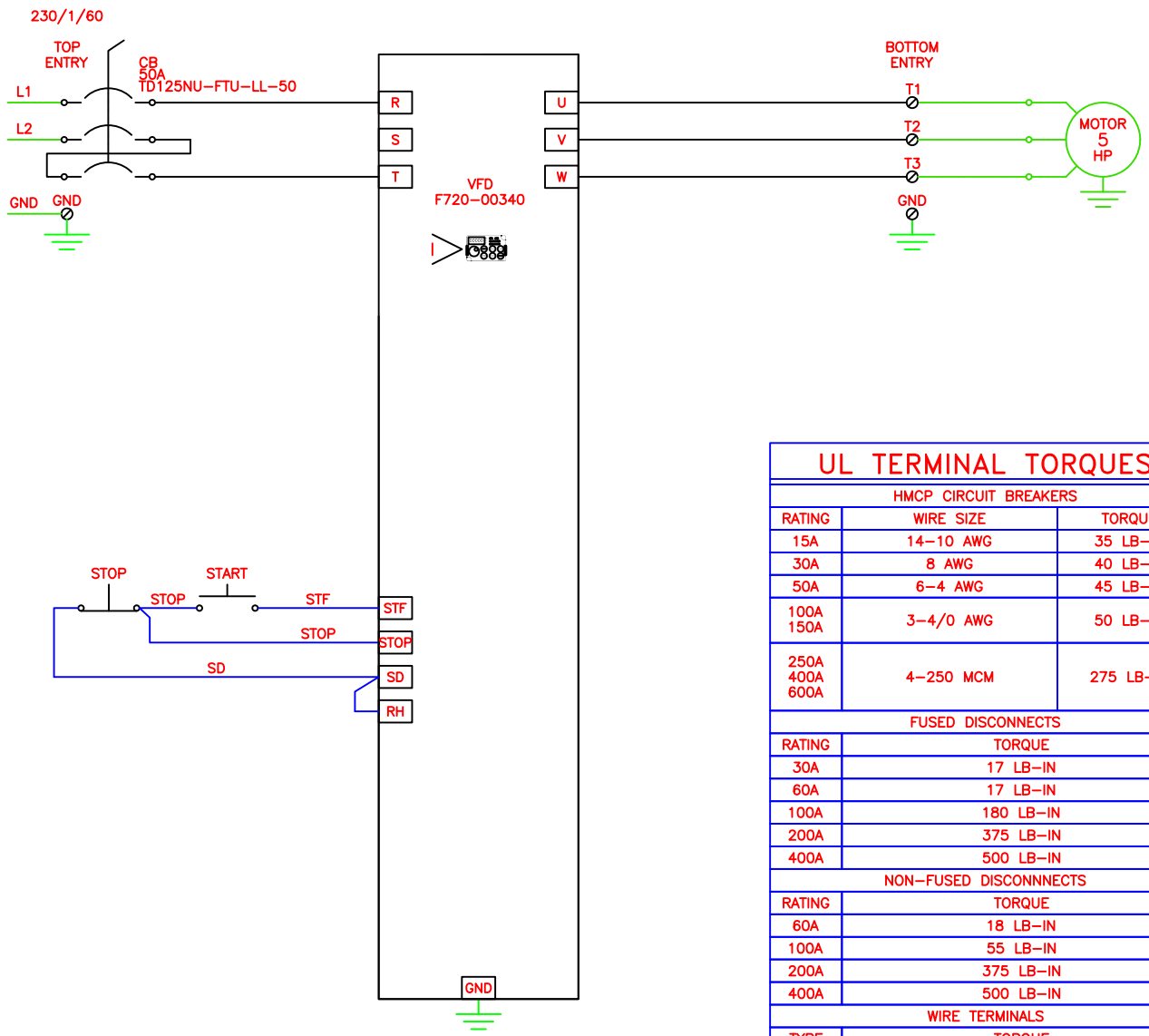

UL TERMINAL TORQUES

HMCP CIRCUIT BREAKERS		
RATING	WIRE SIZE	TORQUE
15A	14–10 AWG	35 LB–IN
30A	8 AWG	40 LB–IN
50A	6–4 AWG	45 LB–IN
100A 150A	3–4/0 AWG	50 LB–IN
250A 400A 600A	4–250 MCM	275 LB–IN

FUSED DISCONNECTS	
RATING	TORQUE
30A	17 LB–IN
60A	17 LB–IN
100A	180 LB–IN
200A	375 LB–IN
400A	500 LB–IN

NON–FUSED DISCONNNECTS	
RATING	TORQUE
60A	18 LB–IN
100A	55 LB–IN
200A	375 LB–IN
400A	500 LB–IN

WIRE TERMINALS	
TYPE	TORQUE
SAK4	9 LB–IN
SAK6	14 LB–IN
SAK10	18 LB–IN
SAK16	21 LB–IN
SAK35	44 LB–IN

POWER DISTRIBUTION BLOCKS	
WIRE SIZE	TORQUE
2/0–3 AWG	120 LB–IN
350–500 MCM	375 LB–IN

TAG: 486–0110

- MRS DRIVE CONNECTION TERMINAL
- 888 DEVICE CONNECTION TERMINAL
- 888 TERMINAL NOT FOR CUSTOMER CONNECTION
- 888 TERMINAL FOR CUSTOMER CONNECTION
- D LOCATED ON ENCLOSURE DOOR
- I LOCATED INSIDE ENCLOSURE
- R LOCATED REMOTE FROM ENCLOSURE
- C LOCATED IN RESISTOR CAGE

- ARROW SUPPLIED ENCLOSURE WIRING
- CUSTOMER SUPPLIED ENCLOSURE WIRING
- ARROW SUPPLIED FIELD WIRING
- CUSTOMER SUPPLIED FIELD WIRING
- OUTPUT DESCRIPTION PLC-OUT YAAAA — SUPPLIED PLC OUTPUT
- INPUT DESCRIPTION PLC-IN XAAAA — SUPPLIED PLC INPUT
- OUTPUT DESCRIPTION PLC-OUT YAAAA — CUSTOMER PLC OUTPUT
- INPUT DESCRIPTION PLC-IN XAAAA — CUSTOMER PLC INPUT

ENCLOSURE	TYPE: NEMA1	COOLING: VENTED	BUS BAR RATING: NONE	HEIGHT: 24	WIDTH: 20	DEPTH: 8
PART NUMBER						

REV.	DATE	DESCRIPTION
2	26–JAN–11	***** AS BUILT *****
1	19–JAN–11	CHANGE TO START/STOP FIXED SPEED CONTROL
0	18–JAN–11	ORIGINAL DRAWING ISSUE

CUSTOMER NAME

CUSTOMER DRAWING NUMBER

AUTOVAC INDUSTRIAL VACUUM SYSTEMS
TOLL FREE NUMBER - 1-888-628-8682
EMAIL: SALES@AUTOVACINC.COM - WWW.AUTO-VAC.COM

AUTOVAC Industrial Vacuum & Air Systems

PLANT

TITLE 5HP 230VAC SINGLE PHASE VFD PACKAGE

SUBTITLE WIRING DIAGRAM

SCALE NONE | DRAWN LHK | DATE 18–JAN–11 | CHECKED

B01568001

2