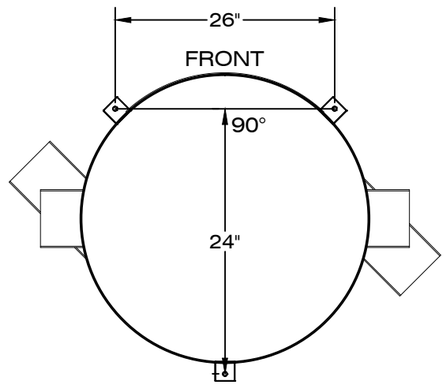

1 DETAIL A - N.T.S.

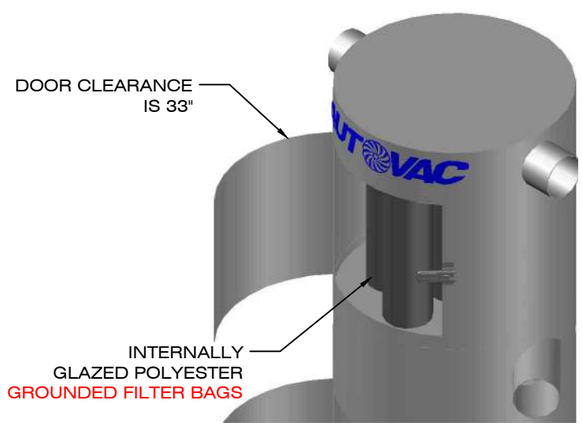

4 DETAIL D - N.T.S.

NOTES: UNLESS OTHERWISE SPECIFIED;

THIS DRAWING IS THE PROPERTY OF AUTOVAC. IT IS A PRELIMINARY DRAWING AND IS NOT TO BE USED FOR CONSTRUCTION OR INSTALLATION WITHOUT THE WRITTEN CONSENT OF AUTOVAC.

PIPING SYSTEMS ABOVE GROUND:
PIPING SYSTEM SHALL BE EITHER SCHEDULE 40 SOLID CORE PVC OR ABS PLASTIC PIPE, WITH PLASTIC D.W.V. (DRAIN, WASTE, AND VENT) FITTINGS. ZINC, ALUMINUM OR GALVANIZED TUBING, WITH DIRECTIONAL FLOW ZINC FITTINGS OF NO LESS THAN 16 GAUGE, DESIGNED SPECIFICALLY FOR CENTRAL VACUUM SYSTEMS. PLASTIC PIPE INSTALLED ABOVE GROUND MAY HAVE THE POSSIBILITY OF CRACKING DUE TO FREEZING. IN FREEZING CONDITIONS STEEL OR ALUMINUM PIPE IS RECOMMENDED.

BURIED PIPING SYSTEMS CAST IRON OR ZINC COATED CARBON STEEL NO-HUB:
IN-GROUND PIPING SYSTEMS THAT ARE SUBJECT TO GROUND FREEZE/THAW CONDITIONS OR EXCESSIVE MOVEMENT SHALL BE CAST IRON OR ZINC COATED CARBON STEEL WITH NO-HUB FITTINGS AND NO-HUB COUPLINGS (WITH STAINLESS STEEL BAND).

BURIED PIPING SYSTEMS PVC SCH. 40:
PIPING SYSTEM SHALL BE SCHEDULE 40 SOLID CORE PVC OR ABS PLASTIC PIPE, WITH PLASTIC D.W.V. (DRAIN, WASTE, AND VENT) FITTINGS. PLASTIC PIPE INSTALLED IN-GROUND HAVE A POTENTIAL POSSIBILITY OF CRACKING AND WEAR. ALL PLASTIC PIPE SYSTEMS IN-GROUND MUST BE BELOW FREEZE LINE.

PIPING SYSTEM NOTES:
ALL INTERIOR SURFACES SHALL BE FREE OF BURRS AND OBSTRUCTIONS FOR NON-RESTRICTIVE AIR FLOW.

ABS AND PVC PIPING SHALL BE CUT STRAIGHT AND REMOVED OF BURRS. PIPING SHALL BE ATTACHED TOGETHER USING A PRIMER AND CEMENT (CLEAR PVC CEMENT FOR PVC AND BLACK ABS CEMENT FOR ABS) FOR 100% TIGHT SEAL.

OVERHEAD PIPING SYSTEMS SHALL BE SUPPORTED BY MEANS OF APPROVED PIPE HANGERS AND SHALL BE INSTALLED AT A MAXIMUM OF SIX FEET O.C. WHEN USING ABS OR PVC PIPE AND TEN FEET WHEN USING ZINC OR ALUMINUM TUBING. ALL FITTINGS SUPPORTING VACUUM DROPS/HOSE ASSEMBLIES SHALL BE SUPPORTED WITHIN ONE FOOT ON EACH SIDE OF THE FITTING CONNECTION.

PIPING SYSTEM SHALL BE TESTED TO HOLD 10 P.S.I. FOR A MINIMUM OF 24 HOURS.

WHEN VACUUM SYSTEM IS INSTALLED IN POTENTIALLY EXPLOSIVE ENVIRONMENT, THE FOLLOWING MY BE REQUIRED AS A MINIMUM. EXPLOSION PROOF MOTOR CLASS 1, GROUP D & CLASS 2 GROUP E, F, & G. ALUMINUM PIPING WITH ZINC FITTINGS. PRIMARY AND FILTERED SEPARATORS AND HOSE ASSEMBLIES REQUIRE SPECIAL GROUNDING. VERIFY ALL CONDITIONS.

PLASTIC PIPE EXPOSED TO ELEMENTS:
PVC PIPE WILL BECOME BRITTLE AT 40° F AND CAN CRACK/SPLIT WHEN MOVING DEBRIS COLLIDES WITH IT. IT IS RECOMMENDED TO USE CAST IRON, ZINC OR ALUMINUM TUBING FOR COLDER CONDITIONS.

PVC AND ABS PLASTIC PIPE ARE NOT U.V. RATED AND WILL DISCOLOR AND SOFTEN CAUSING BOWING WHEN EXPOSED TO DIRECT SUNLIGHT . IT IS RECOMMENDED THAT ALL EXPOSED PLASTIC PIPE AND FITTINGS BE PRIMERED AND PAINTED TO HELP PREVENT THIS. IT IS RECOMMENDED TO USE ZINC OR ALUMINUM TUBING WITH ZINC FITTINGS WHEN EXPOSED TO DIRECT SUNLIGHT.

CHANGES MADE TO VACUUM SYSTEM WITHOUT AUTOVAC CONSULTATION VOIDS ALL AUTOVAC RESPONSIBILITIES AND SYSTEM WARRANTY.

EQUIPMENT WARRANTY INFORMATION: (IF APPLICABLE)
WHEN VACUUM EQUIPMENT IS INSTALLED IN AN ENCLOSURE WITH 4 WALLS AND A ROOF, IT MUST BE VENTILATED. ENCLOSURE DOOR MUST BE LOUVERED AND A EXHAUST FAN WITH A THERMOSTAT SET AT 85° MUST BE INSTALLED TO TURN OVER AIR EVERY 15 MINUTES. VACUUM TURBINE MUST BE EXHAUSTED OUTSIDE WITH A METALLIC PIPE NO SMALLER THAN 6" WITH EXHAUST PIPE OPENING PROTECTED FROM ELEMENTS. EQUIPMENT PAD MUST BE FLAT AND LEVEL. AMBIENT ROOM TEMPERATURE CANNOT EXCEED 105° F.

VARIABLE FREQUENCY DRIVE (VFD) WARRANTY INFORMATION: (IF APPLICABLE)
EACH VFD MUST BE WIRED FROM MAIN DISTRIBUTION PANEL IN SEPARATE CONDUIT (SIZED PER CODE: BASED ON TURBINE H.P. AND VOLTAGE) TO EACH VFD AND FROM EACH VFD TO TURBINE MOTOR. A SEPARATE CONDUIT (SIZED PER CODE) MUST ALSO BE INSTALLED FROM VFD TO VACUUM PRESSURE TRANSDUCER INSTALLED ON FILTER SEPARATOR . IF TWO (2) OR MORE VFD'S ARE INSTALLED IN ONE (1) ENCLOSURE, A SEPARATE CONDUIT MUST BE INSTALLED FOR EACH VFD. INSTALL SEPARATE CONDUIT FROM ENCLOSURE TO EACH TURBINE MOTOR, AND EACH FILTER SEPARATOR IF THERE IS MORE THAN ONE (1).

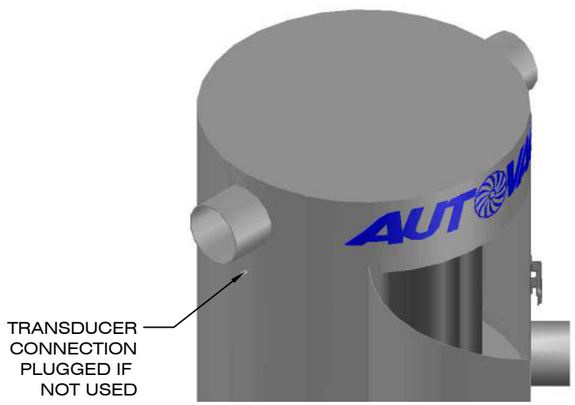

2 DETAIL B - N.T.S.

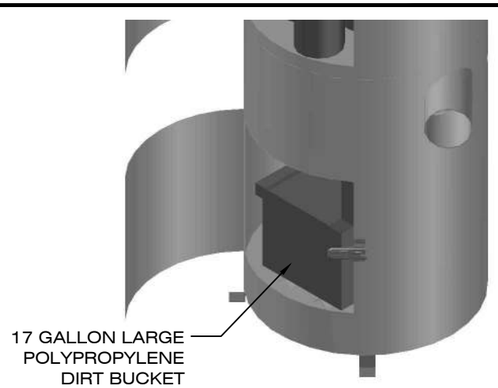

3 DETAIL C - N.T.S.

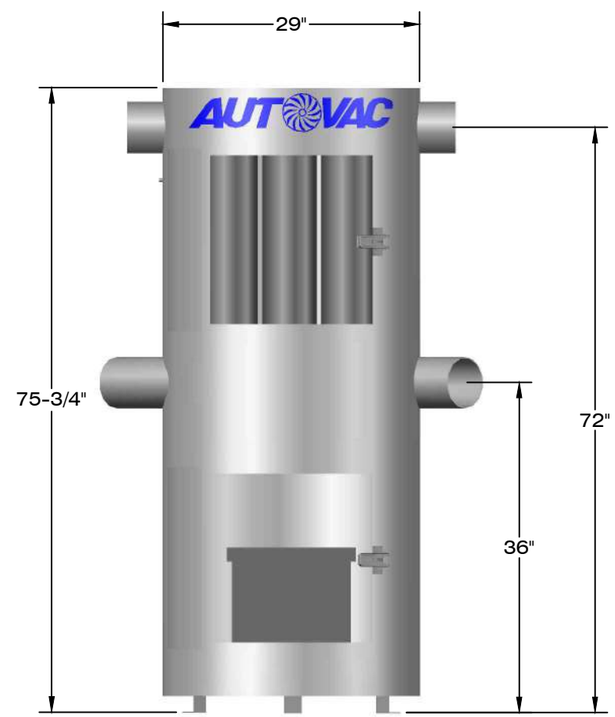

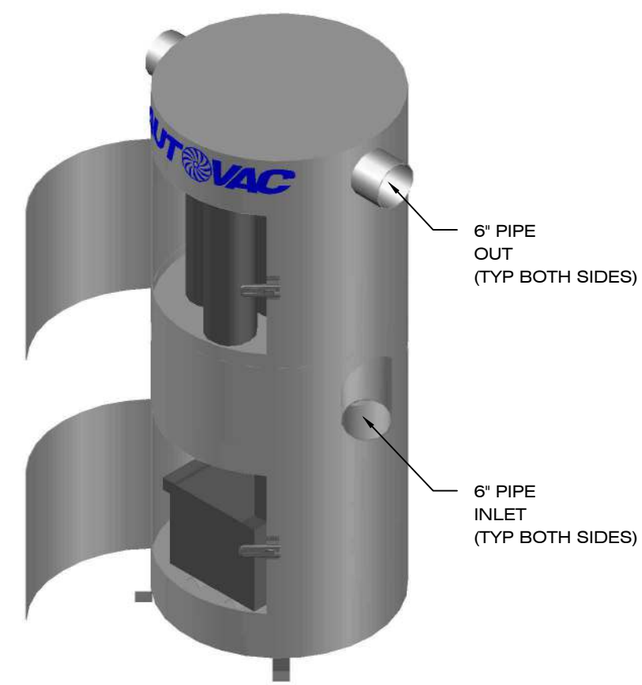

5 72" x 30" FILTER SEPARATOR - 6" IN / OUT - PART NO: C316-1011

AUTOVAC Industrial Vacuum & Air Systems

APPROVED BY:	
DATE:	
DESCRIPTION:	
DRAWN BY:	
REVISION NUMBER:	

FILTER SEPARATOR DETAILS & DIMENSIONS

DRAWN BY: WBD	CHECKED BY: XXX	MFG. APPROVAL: XXX	SHEET NO: 1 OF 1
SALES PERSON: R.REED	FINAL: XXX	DATE: 10/05/12	CURRENT REV. -