- **A** These lines carry dirt and debris from Vacuum Cleaning System, one or two lines are required.
- **B** 6" Vacuum Producer exhaust air. Pipe to atmosphere 20 ft. max. with metallic pipe no smaller then 4".
- **C** 6" Vacuum Producer inlet air and filter separator vacuum supply line.
- **D** Not used
- **E** Foot pad leg support, 3 locations typical.
- **F** Industrial duty 4 bearing, coupled vacuum producer.
- **G** Support pipe every 10 ft. minimum with an approved support hanger system. Never allow pipe to sag. Install hangers as needed. Sway brace as required.
- **H** Optional Equipment: Electrical connection required for disconnect switch, magnetic starter or Vacuum IQ to Vacuum Producer per local code. Installation location to vary.
- **I** Filter Separator Model # SF101Z.
- **J** 6" diameter pipe carries dirt from system. See pipe system drawings.
- **K** Foot pad leg support, 3 locations typical. Do not bolt down firm, leave lock nut on stud 1/2" above mounting plate.
- **L** Transducer cable from Separator to Vacuum IQ via conduit (supplied by others).
- **M** Motor control cable from Vacuum Producer to Vacuum IQ via conduit (supplied by others).
- **N** Vacuum I.Q (Optional)
- **P** Disconnect Switch

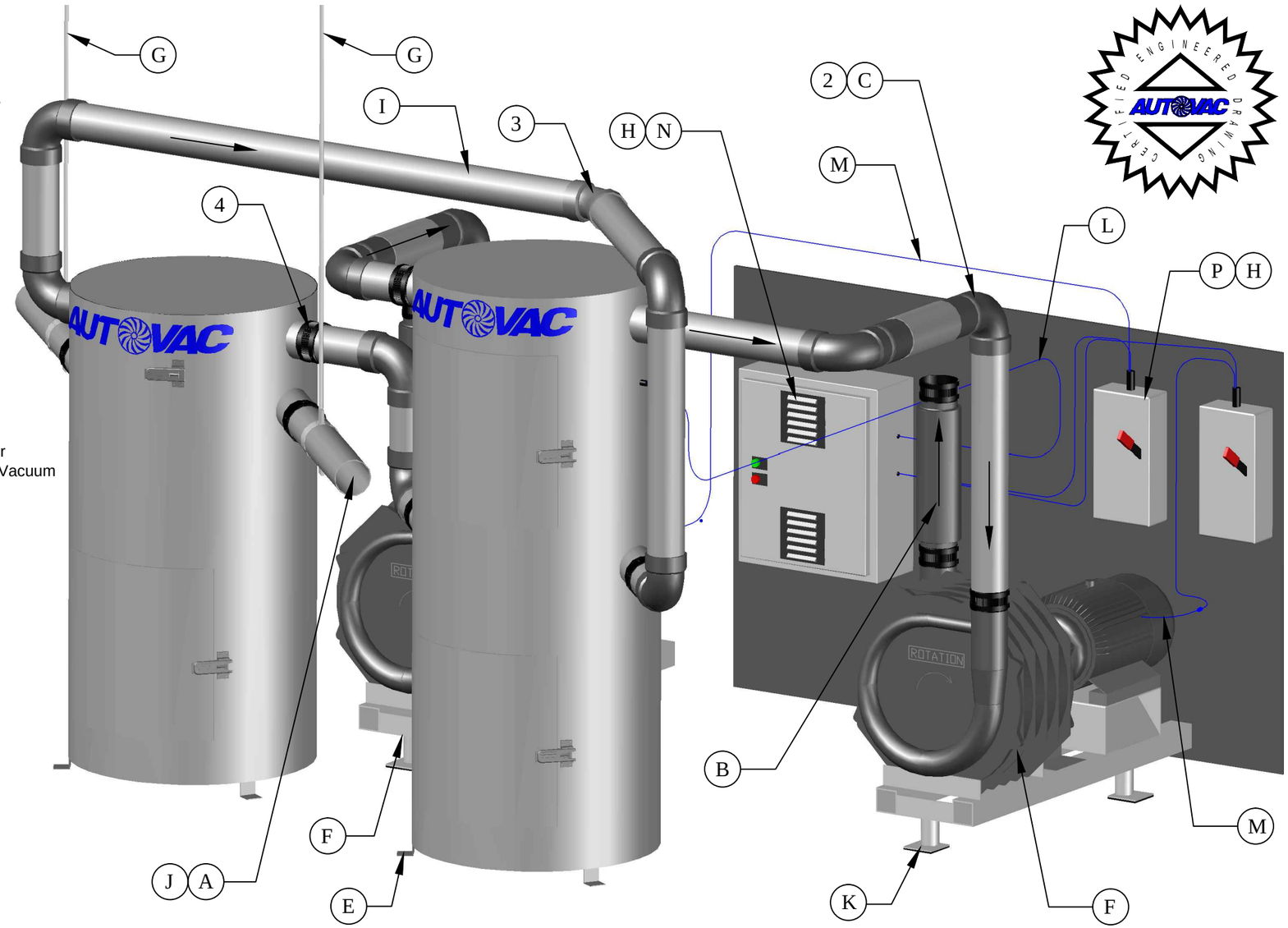

EQUIPMENT HOOK-UP PARTS LIST

NO.	DESCRIPTION	PART NO.	MFR.	QTY.
1	6" ABS PIPE	C521-0004	AUTOVAC	50'
2	6" ABS LONG SWEEP 90° ELBOW	C526-0204	AUTOVAC	12
3	6" ABS 45° ELBOW	C526-0004	AUTOVAC	2
4	6" NO-HUB	C591-0004	AUTOVAC	4
5	6" ABS FEMALE ADAPTER	C528-0004	AUTOVAC	4
6	6" ABS COUPLING	C527-0004	AUTOVAC	2

All pipe and fittings will be shipped ABS material DWV (drain, waste & vent) style fittings. All fittings will be long sweep directional flow.

Partial reproduction of material inside borders is not authorized.

→ Direction of Air Flow.

6" SINGLE VACUUM PRODUCER, FILTER SEPARATOR & PRIMARY SEPARATOR EQUIPMENT HOOK-UP KIT ABS PIPE

X211-6

AUTOVAC Industrial Vacuum & Air Systems

APPROVED BY:
DATE:
DESCRIPTION:
DRAWN BY:
REVISION NUMBER:

6" DUAL VACUUM PRODUCER, FILTER SEPARATOR & PRIMARY SEPARATOR EQUIPMENT HOOK-UP KIT - ABS

DRAWN BY: WBD	CHECKED BY: ST	MFG. APPROVAL: XXX	SHEET NO: 1 OF 1
SALES PERSON: XXX	FINAL: ST	DATE: 10/25/2012	CURRENT REV. -